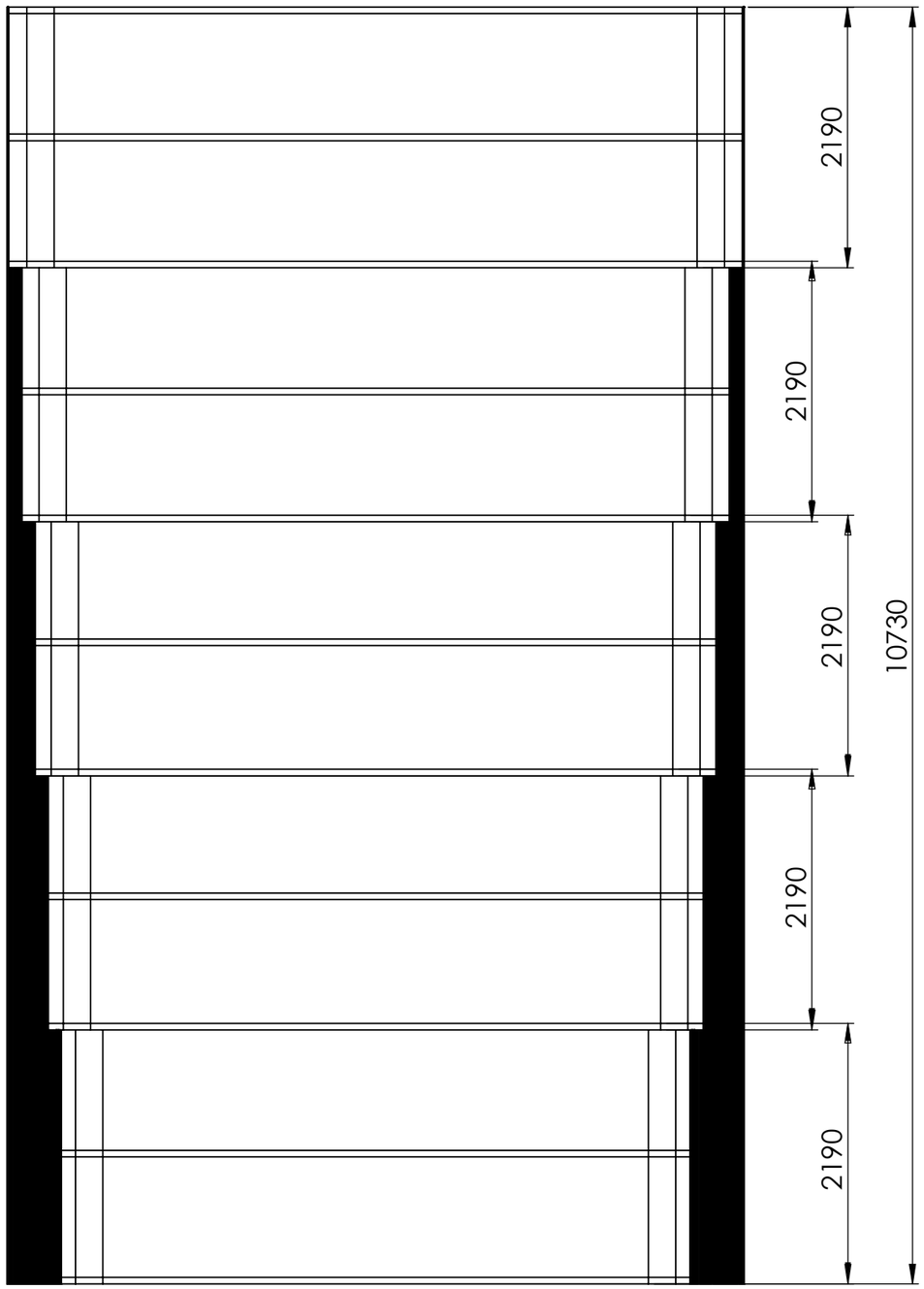


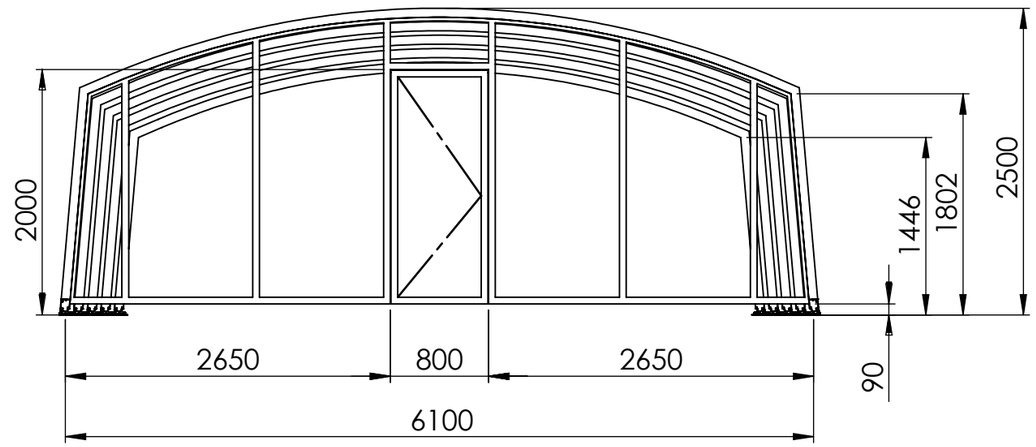


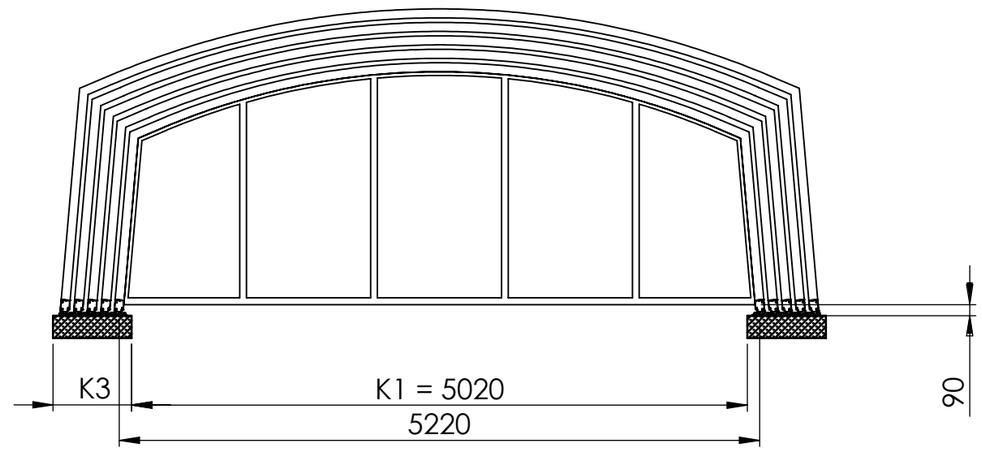


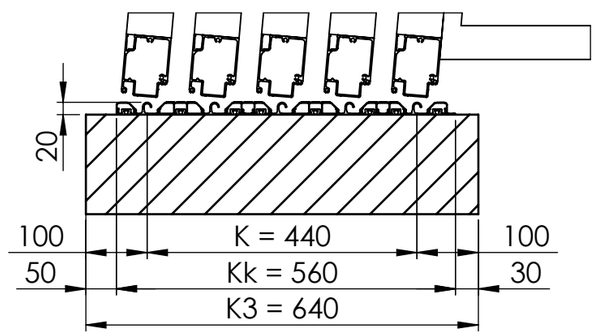


| | | | | | |
|---|---|---|---|---|---|
| PRODUCT TYP | **SkyCover®Royal Clear 5,0x10,6m** | | | | |
| PK 4mm | DB 703 | | | | |

POOLSYSTEMS