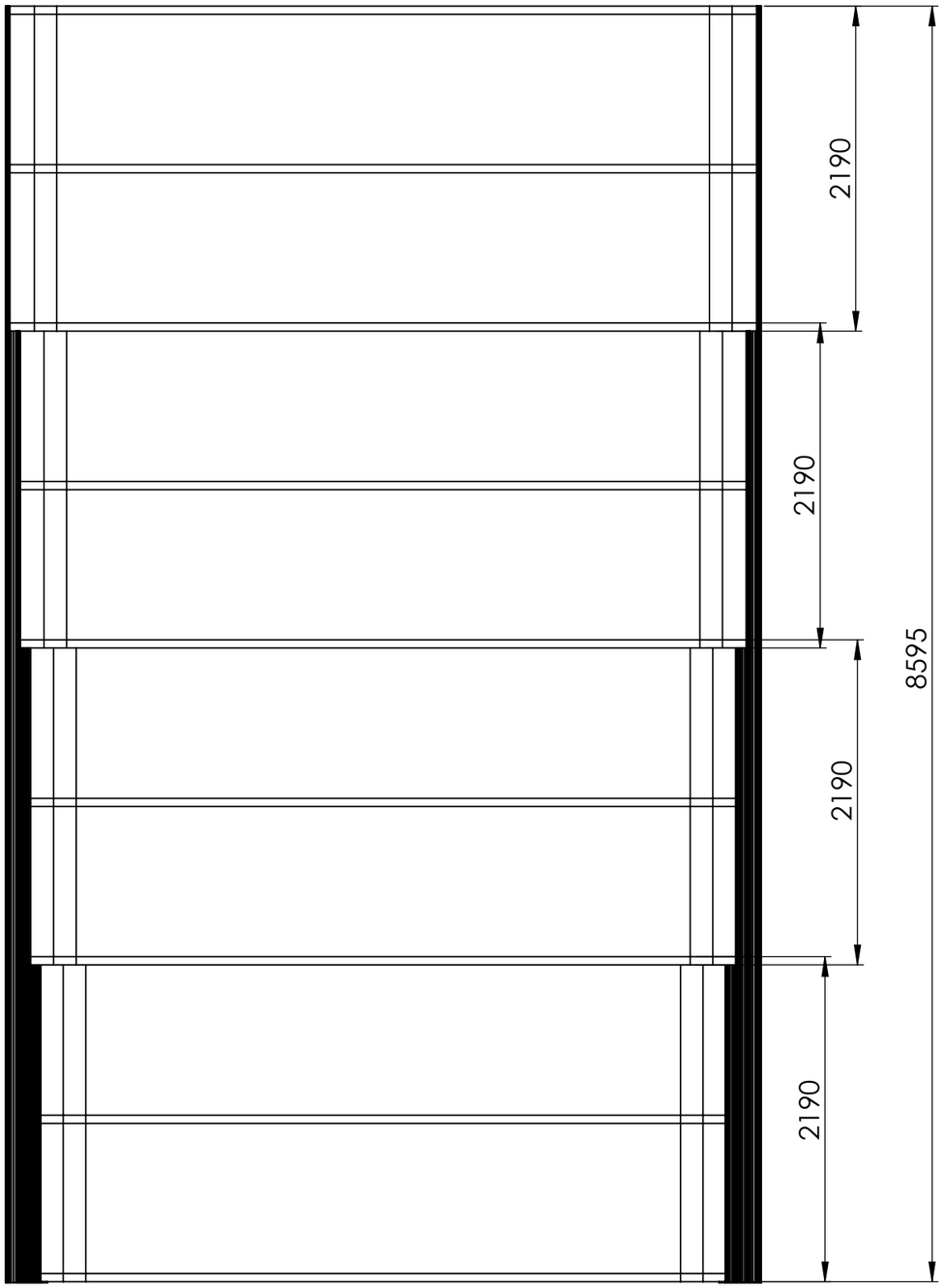

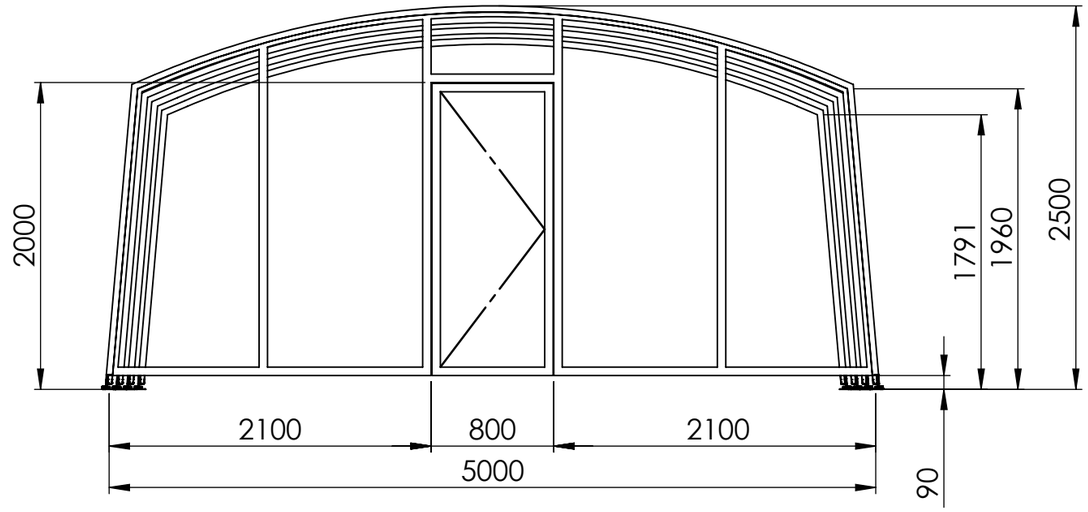

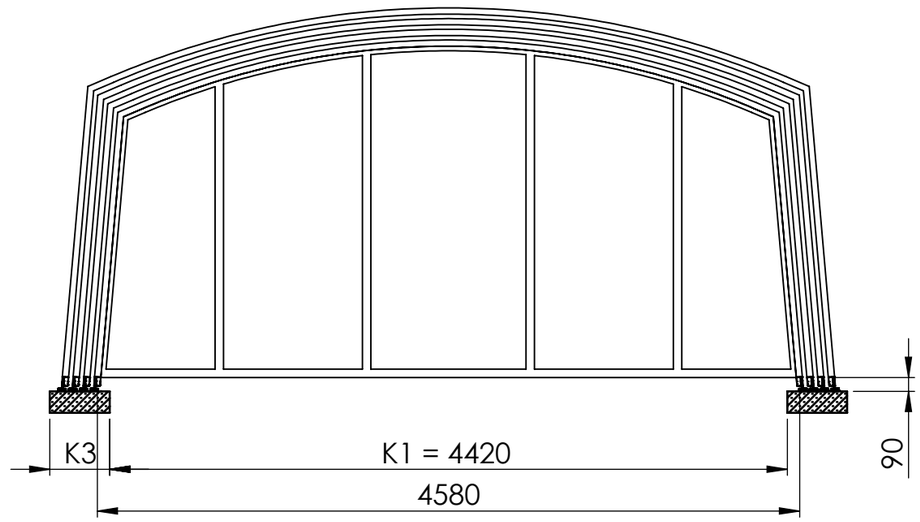

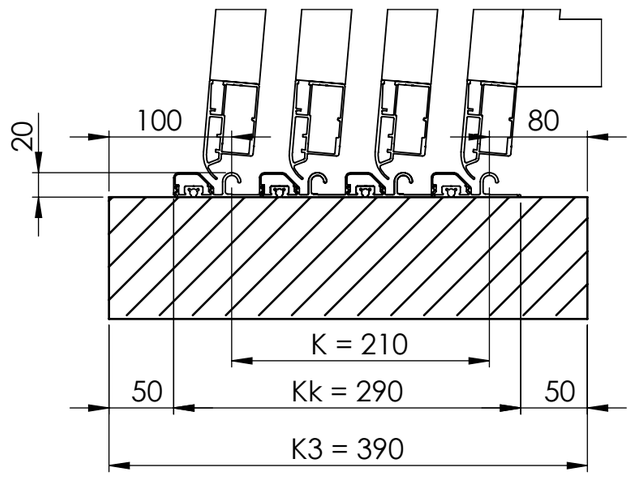

PRODUCT TYP	**SkyCover®Royal Clear 4,5x8,5m**				
PK 4mm	DB 703				

POOLSYSTEMS